GGM

www.ggm.co.kr

USER MANUAL

GUD SERIES
SPEED CONTROL UNIT

DIGITAL

■ Head Office : 327-3, Songne Dong Sosa Gu Bucheon Korea
Tel:(032)664-7790 Fax:(032)611-7791

■ 2nd factory : 272-11, Dodang Dong Wonmi Gu Bucheon Korea
Tel:(032)684-7791 Fax:(032)683-5059

GGM GGM Co., Ltd.

We thank you very much for your purchase our GGM products.

Before you start to use this product, we strongly recommend you to read this manual carefully for you to acquire knowledge, safety information and cautions, etc., about this product in order to use it properly.

1. Check the product upon its arrival

-Please check the delivered product whether it is the same one as ordered.

-If different product from that of order is installed, then it may result in a risk of injury, fire.

-The product is well packed in paper box in order to protect from shock, and it contains following items.

Please check if it contains following items.

1) Controller.....1 piece
2) Extension wire(0.5m).....1 piece
3) User manual(This manual).....1 copy
4) Options(Extension lines)

Items	Lengths
KE-10	1.0m
KE-15	1.5m
KE-20	2.0m
KE-40	4.0m
KE-50	5.0m

2. Specification

Model Name	GUD-U	GUD-J	GUD-C	GUD-L
Input voltage	single phase AC110V/115V 50/60Hz ±10%	single phase AC100V 50/60Hz ±10%	single phase AC220V/AC230V AC240V 50/60Hz ±10%	single phase AC200V 50/60Hz ±10%
Output power and current of motor	6W-180W, AC, speed control motor/3.0A			
Real RPM	After green color LED ON of RUN/STOP, red color 7 SEGMENT 4 DIGIT			
Ratio RPM	After RATIO red color LED ON, Red color 7 SEGMENT 4 digit			
LED condition table	Input electric power (Stop)		RUN/STOP LED red color & REAL	

		LED red color
	Operation(RUN)	RUN/STOP LED green color & REAL LED red color
	Error occurs	RUN/STOP LED red color is flickering
	SLOW ON operation	Slow start LED red color
	SLOW OFF operation	Slow stop LED red color
	Data lock	Lock LED red color
Control method	AC Phase control method by MICOM	
Kind of controls	Speed control in proportion to measured value(automatic control by MICOM)	
Pulse input	Selectable from 1 to 99 pulses, GGM rated specification: 12 pulses	
Speed setting method	Increase or decrease by 5 by input setting	
Scope of control	50Hz = 90 ~ 1400rpm, 60Hz = 90 ~ 1700rpm	
Information function	MICOM self diagnosis function	
Power consumption	About 5W(10VA), excluding power consumption of motor	
Control error	Average +/-5%	
Setting key 4	1)RUN/STOP 2)MODE 3)UP 4)DOWN	
Measuring method	Pulse timing calculation measuring method by MICOM	
Remote RUN/STOP	Selected use of remote S/W	
Vibration resistance durability	2 hours for the direction to 0.7mm X, Y, Z, 10 ~ 55Hz	
Shock resistance durability	250m/s 6 directions for 3 times	
Noise resistance	1500V/ms for power lines, 500V/ms for TG lines	
Dielectric strength	It must stand for more than 1 minute at AC 1500V, 50/60Hz between power line terminals and earth.	
Life of controller	Semi-permanent at optimized condition to use	
Insulation resistance	Above than 100Mhom between TG terminal and earth measured with DC500V megger	
DIMENSION	60(W)x100(H)x100(D)	
Operation temperature	-10℃ ~ +40℃	
Operation humidity	Below 85% RH(No dew)	

3. CODING SYSTEM

G	U	D	-	C	-	60	

- G: GGM Co., LTD.
- U: Unit Type
- D: Digital Type
- C:
  - C : Single Phase AC220V 50/60Hz AC230V 50/60Hz AC240V 50Hz
  - L: AC200V 50/60Hz
  - U : Single Phase AC110V 60Hz AC115V 60Hz
  - J : Single Phase AC100V 50/60Hz
- 60:
  - 06 : 6W
  - 15 : 15W
  - 25 : 25W
  - 40 : 40W
  - 60 : 60W
  - 90 : 90W
  - 120 : 120W
  - 180 : 180W
- 50/60Hz common use

4. Outline of Product

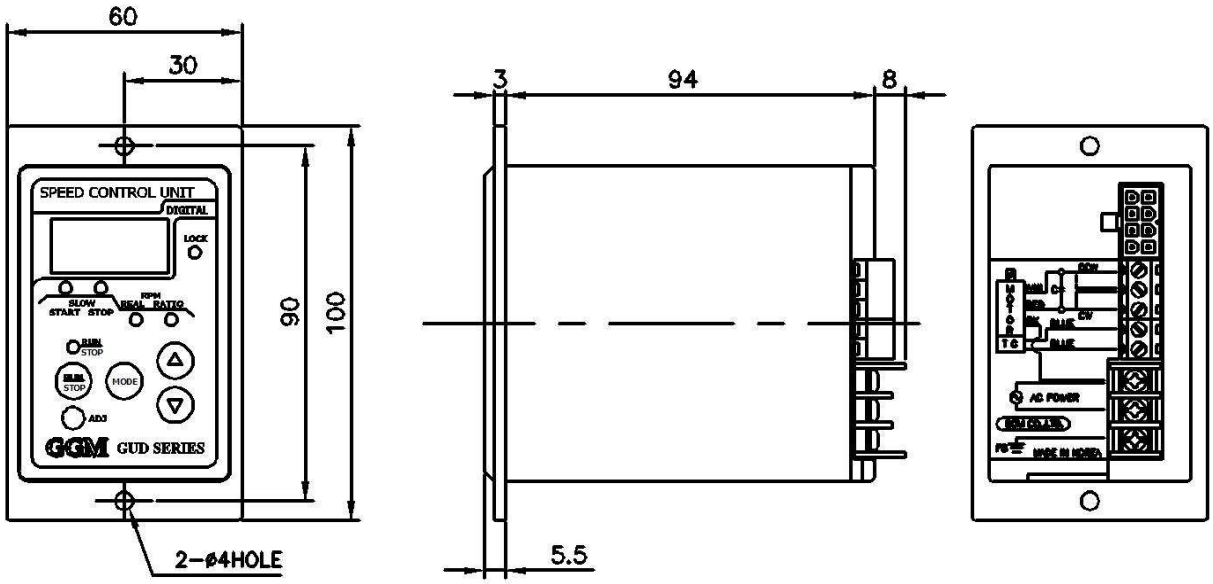

5. Caution for Use

<warning>

There are live electric parts at rear side of controller.
Please install it in a box in order for 3rd person not to be easily contacted.

- Use it with 3P terminals covered. It may cause risk of electric shock.
  (It is basically equiped with this product)
- Do not contact it with wet hands. It may cause risk of electric shock.
- Switch it off during installation, transportation, wiring, checking.
  It may cause risk of electric shock.
- Be careful for water not to be splashed at a location of risk of water contact.
- Switch it off during interruption of electric power or when the thermal protector against overheat is operated. It may cause possible injury if it is restarted in a sudden.

<Cautions>

- Please do not alter the product because it is outside our guarantee and it may cause risk of electric shock and/or fire.
- Please contact our company or our agent if repair is required.
- The controller does not have any protecting device. Therefore please install safety devices such as overcurrent protector, earth leakage breaker, thermal protector against overheated, etc.
- Do not use it at places of a lot of static electricity. It may cause risk of injury due to unexpected operation.
- Do not use damaged motor. It may cause risk of electric shock or injury.
- Please check the product upon delivery whether it is the same as you ordered. It may cause any risk of injury or fire.
- Do not place any inflammables around motor.
- Do not contact it with your hands or body during operation or immediately after stop of operation. It may cause risk of injury due to high temperature of motor surface.
- Do not use it at the place where inflammable gas and/or corrosive gas is generated. It may cause risk of fire.
- If you dispose of this product, then dispose of it as industrial waste.

6. Name and function of each part

<picture1 - Front >

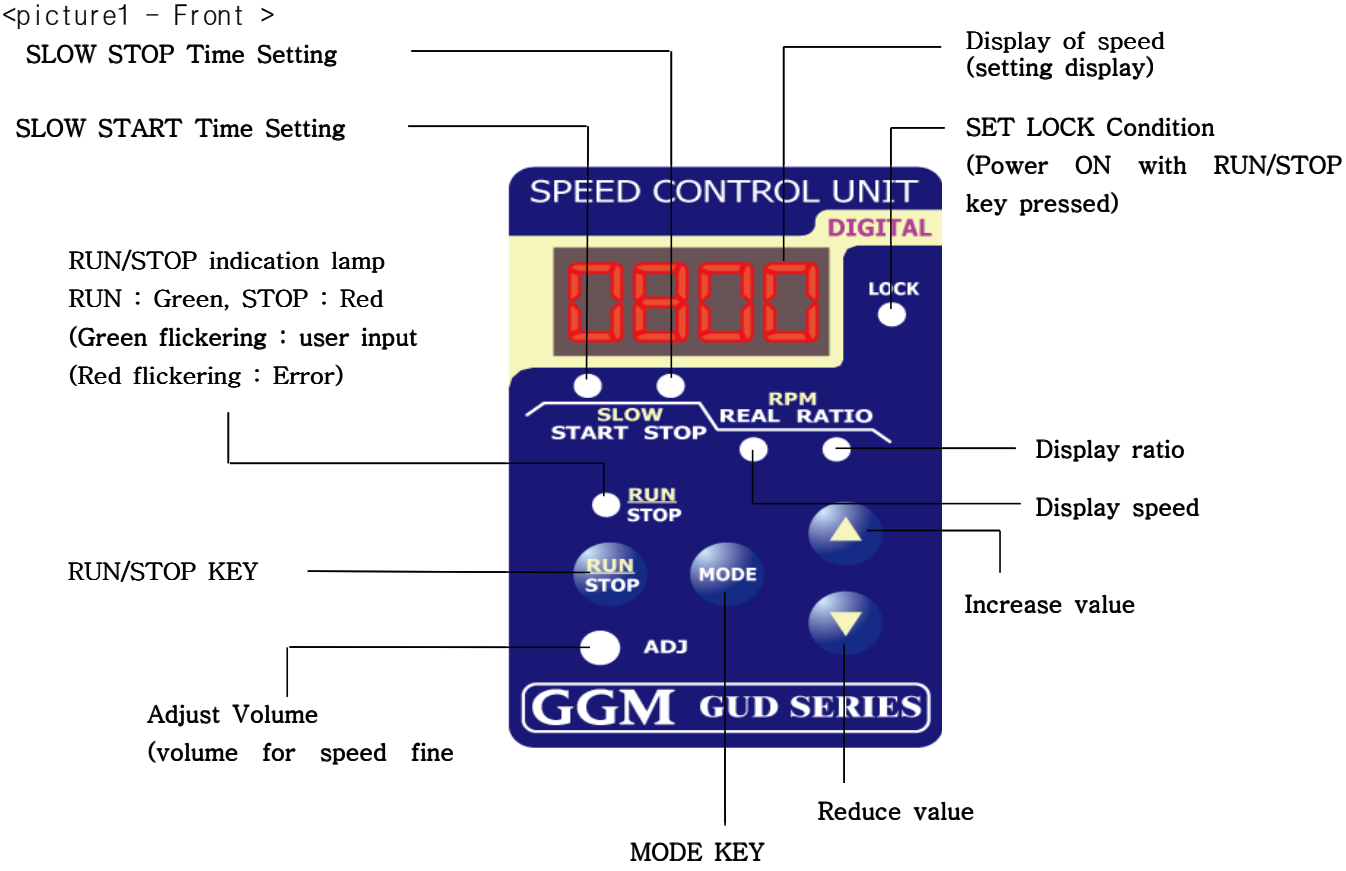

<Picture 2 - Rear Part>

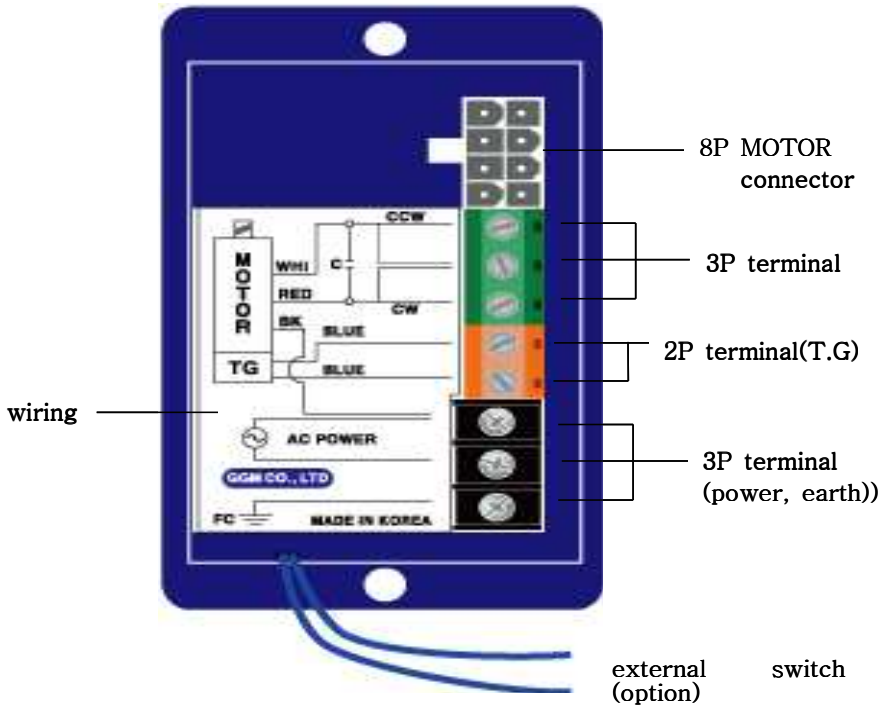

7. How to set operation mode

If mode key is pressed, then the mode is changed in following sequence

RATE → TURN → S-ON → SOFF → TRCH → LOCK

[RATIO MODE]

The rotating speed of motor is divided by magnification factor to display its actual speed(It is set to 1.0 at the time of shipment)

Press mode key and then select "RATE" mode. If figures are flickering on the display screen, set reduction ratio of speed by pressing △,▽ keys.

1) Setting values of reduction ratio of gear speed

Real RPM = rotating speed of motor - Ratio value (adjustable by 0.1 unit between 1~999.9)

Nominal Reduction ratio	Actual reduction ratio				
	K6G□B(C)	K7G□B(C)	K8G□B(C)	K9G□B(C)	K9P□B(F) K9P□BU(F)
3	3	3	3	3	3
3.6	3.6	3.6	3.6	3.6	3.6
5	5	5	5	5	5
6	6	6	6	6	6
7.5	7.5	7.5	7.5	7.5	7.5
9	9	9	9	9	9
10	10	10	10	10	10
12.5	12.5	12.5	12.5	12.5	12.5
15	15	15	15	15	15
18	18	18	18	18	18
20	20	20	20	20	20
25	25	25	25	25	25
30	30	30	30	30	30
36	36	36	36	36	36
40	40	40	40	40	40
50	50	50	50	50	50
60	60	60	60	60	60
75	75	75	75	75	75
90	90	90	90	90	90
100	100	100	100	100	100
120	120	120	120	120	120
150	150	150	150	150	150
180	180	180	180	180	180
200	202.8	200	200	202.5	201.7
250	250.2	-	254.5		

ex) 1.0, 1.1, 1.2 ..... 2.0.....999.9

If the rotating speed of motor is set at 1000rpm and its reduction ratio of speed is set at 2, 1000/2=500(REAL rpm)

2) Setting value of multiplying magnification factor

REAL rpm = Rotating speed of motor / ratio value

(Adjustable by 0.1 unit in the range of 0.2 ~ 0.9)

ex) 0.2. 0.3 .... 0.9

If motor rotating speed is set at 500rpm and multiplying magnification factor is set to 0.5, then 500/0.5 = 500 x 2=1000(REAL rpm)

[TURN MODE]

This mode is to set rotating speed.

If mode key is pressed and "TURN" mode is selected, then RUN/STOP LED is flickering in green color and then you may set the rotation speed of motor by pressing △,▽ key.

In this case each time of △,▽ key is pressed it moves by 5rpm unit and if it is pressed continuously then it is increased or decreased by 10rpm unit.

ex) If the frequency of electric power is 50Hz:

90 100 110 ..... 1400 ~ 1500 rpm.

If frequency of electric power is 60Hz:

90 100 110 ....1400 ~ 1800rpm

*Note: This product is for both 50/60 Hz.

- If this product is being used at 1500 ~ 1800rpm 60Hz and it is changed to 50 Hz then it automatically changed to 1500rpm. (On the basis of magnification factor 1.0).
- If this product is being used at maximum RPM 1500rpm 50Hz and it is changed to 60Hz then it runs at 1500rpm without any change of the speed, and in this case speed can be set in range of 1500 ~ 1800rpm by increasing the turn setting value.(On the bases of magnification factor 1.0).
- Change of power frequency 50Hz <->60Hz below 1500rpm then the speed is almost the same.

[SLOW ON MODE]

This mode is to set to slowly increase the speed of motor.

Press MODE KEY and select "S-ON" MODE During flickering of figures on the display panel you can set SLOW operating time by pressing △,▽ key.

You can set 0 ~ 30 seconds(In the unit of 0.1 second)

[SLOW OFF MODE]

This mode is to set to slowly decrease the speed of motor.

Press MODE KEY and select "S.OFF" Mode. While the figures on display panel is flickering, you can set SLOW stop time by pressing △,▽ key.

It is adjustable in the range of 0 ~ 30 seconds(In 0.1 second unit)

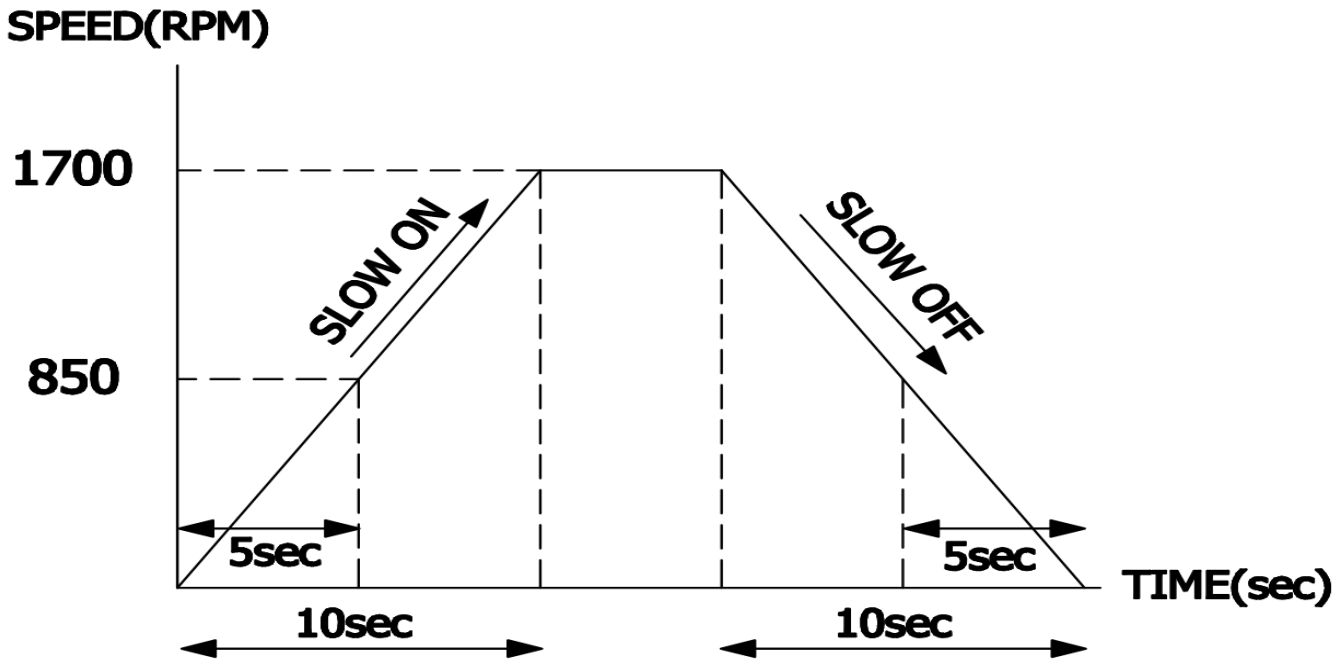

<Figure 3> Graph showing motor speed changes according to SLOW ON/OFF item.

Example) After each time of SLOW ON/OFF set to 10 seconds, if the TURN setting is set to 1700rpm then it takes 10 seconds for it to reach from 0 to 1700rpm and likewise it takes 5 seconds for it to reach to 850rpm.(See figure 3)

**If inertia of load is large, then it may take longer time.

[TACHO MODE]

This mode is to adjust number of TACHO poles.

The default value of this product at the time of release is set to "12" to fit to our motor. (It is adjustable 1~99, but it is usually used at 12 or 24)

If the value of TACHO is set to too low or too high comparing with motor, it may not reach to the operating speed of motor or it may

[LOCK MODE]

This mode is to prevent any change of the set operating condition by locking setting keys except RUN/STOP KEY

Operations to be recognized in the LOCK MODE.

After setting the operating condition, press MODE key and then select "LOCK" MODE. While "LOCK" is flickering you may set it by pressing △,▽ key.(LOCK LED is lit).

① RUN/STOP KEY
② ADJ VOLUME CONTROL
③ POWER ON/OFF

*How to release LOCK MODE
It is released if electric power is switched ON with the RUN/STOP KEY pressed.

[POWER ON CONDITION SETTING MODE]

This mode is to select operating condition of motor at the time of electric power being switched ON. There are 2 modes "YES", "NO" in the POWER ON CONDITION SETTING.

Press MODE KEY + △ or ▽ Key and then set to "YES" or "NO".

<Table 1 - Description of POWER ON CONDITION MODE>

<table>
<tr><td colspan="2">Set to YES</td><td rowspan="4">Last condition before power switch OFF is "RUN" then if the power switched on then it is always "RUN" condition. Likewise if the last condition before power switch off is "STOP" then if the power is switched on then it becomes always "STOP".</td></tr>
<tr><td>Last condition before power switches OFF</td><td>If power is switched ON</td></tr>
<tr><td>'RUN' condition</td><td>Start up</td></tr>
<tr><td>'STOP' condition</td><td>Stop</td></tr>
<tr><td colspan="2">Set to NO</td><td rowspan="4">Whether the last condition before power switch off is 'RUN" or 'STOP",
If power is switched on then it becomes always "STOP"</td></tr>
<tr><td>Last condition before power switch OFF</td><td>If electric power is switched ON</td></tr>
<tr><td>'RUN" condition</td><td>STOP</td></tr>
<tr><td>"STOP" condition</td><td>stop</td></tr>
</table>

*It is set to "NO" at the time of release of the product.
(The reason why it is used in usually at "NO" set condition is that it can prevent any risk of sudden operation at the time of recovery of electric power interruption.)

8. Basic operation method

1) Preparation of operation

Switch on the power and set [POWER ON CONDITION SETTING MODE]
to "YES" or "NO". (Default value set at the time of release of the product is 'NO")
*See page 10 [POWER ON CONDITION SETTING MODE]

2) Setting of rotation direction

After power switched off, if the terminals located at rear of controller is wired CW-COM
then it rotates clockwise, and if terminals are wired CCW-COM then

it rotates count clockwise.

Note) Rotation direction in the view from output side of motor

CW	Clockwise direction
CCW	Count clockwise direction

Caution)

* See page 6 [Figure 2-description of rear part]

3) Connection of motor

: Connect the connector for motor.

4) POWER ON

: Switch ON electric power.

5) Selection of magnification factor

: Set the decrease or increase ratio of gear.(The default value is set at 1.0 at the time of release of the product)

* See page 7[RATIO MODE]

6) Setting SLOW ON/OFF time

The default value for both ON/OFF is set to 0 second at the time of release of the product.

*See page 9 [SLOW ON}, {SLOW OFF].

7) Operation

Select OPERATION with RUN/STOP KEY. The start of operation is indicated by RUN/STOP LED changed into green color.

During operation, speed is adjustable by pressing △,▽ key in TURN MODE.

SLOW ON/OFF time is adjustable even during operation.

8) Change of rotating direction (CW<->CCW)

After switched off the power, the rotating direction of motor can be changed by using direction change terminals located at rear part.

9) STOP

Select STOP with RUN/STOP KEY. STOP is indicated with RUN/STOP LED changed into red color.

10) Option (Use of external switch)

GUD is available with use of external switch.

External Switch "ON" causes temporary stop during running.
(External Switch "OFF" return to Running)

During stop when changing external switch ON to OFF, start running with setting value..

*Note :

External Switch OIN	External Switch Cable Connected
External Switch OFF	External Switch Cable Not Connected

<Figure1>

RUN/STOP	External Switch	Running
RUN - LED Green	ON	Temporary Stop
	OFF	Run
STOP- LED Red	ON -> OFF	Run (run with last setting value)
	OFF -> ON	Stop

※ Note : During External Switch ON, Mode & RUN/STOP button can't be worked.

9. Fine adjustment of rotating speed(Speed adjustment)

RPM value set in TURN MODE may be different from actual RPM according to the load condition . In this case it is adjustable with ADJ volume. You can do fine adjustment with small watch-driver.

Note - ADJ volume shall not be turned by force or strongly pressed. The watch-driver shall be maintained at right angle to the ADJ volume hole during adjustment.

*See page 13 [Figure 5]

<picture5> ADJ Volume Control

10. Count measure against noise

If it makes error during operation due to noise from external lines then use following noise filter.

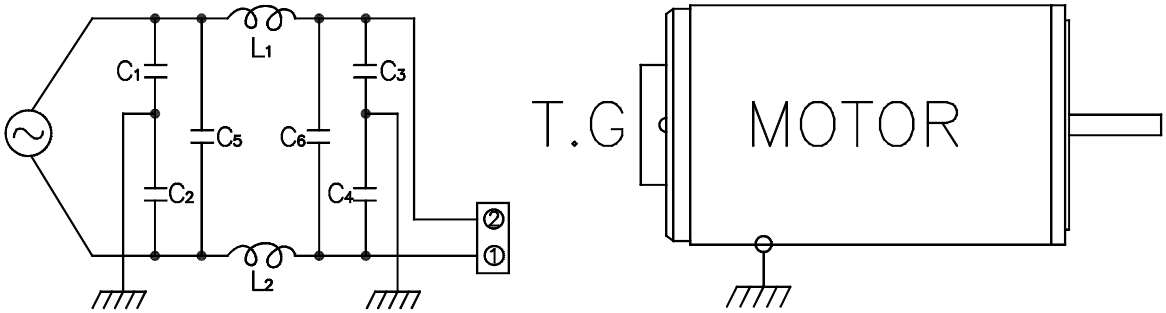

C1~C4 : 1000PF(2000VDC)
L1~L2 : about 100uH

C5~C6 : 0.1uF~0.2uF(AC 125WV or AC 250WV)

(Note) 1. L1 ~ L2 shall not be self saturated by motor current.
2. The motor shall be grounded to the same position of the earth of condenser.
3. The wiring shall be short in length and the thick in diameter for earthing.

11. PANEL PROCESSING DIAGRAM

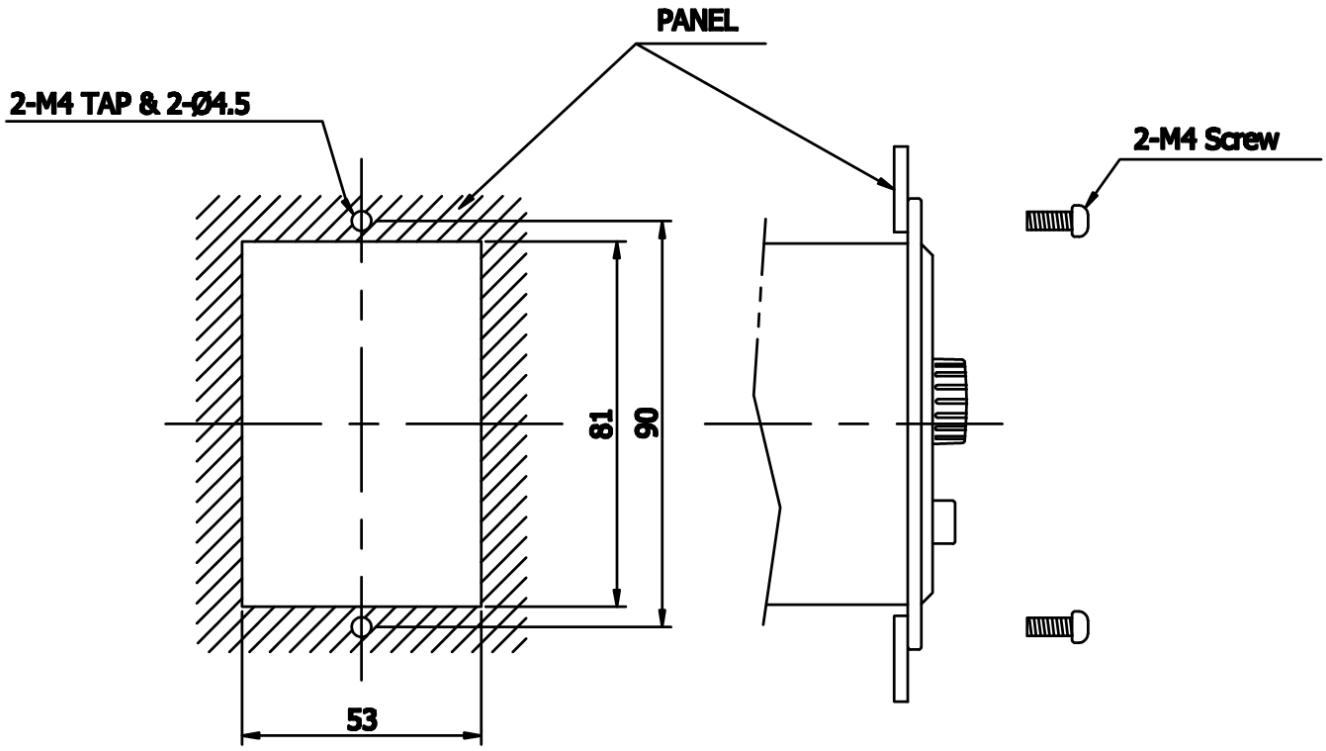

Method to fix by making holes at four faces.

12. Checking

Performance of parts may become bad and their life may make problems due to influence

from operating environment(temperature, humidity, dust, vibration, etc), routine

checking in advance is very important in order to prevent unexpected failure.

13. Causes and count measure of faults

.If any abnormal condition occurs, "ERR.#(ERROR NUMBER)" is to be displayed.

<List of error messages>

Err.1	Frequency signal(50/60Hz signal pulse) are not inputted. Power connection is abnormal.
Err.2	T.G connection is abnormal or direction change terminals are not connected. Motor is not connected.
Err.3	Motor does not operate. Check the connection of starting condenser. T.G signal is abnormal

If electric power is switched on again then it may return to normal operation. (However, set value is the default value at the time of release of product.)
If "Err.#" is still displayed even after power switch on again then fault may be considered in the internal circuit.
(Please contact A/S section of our company)

Q-1) Display panel goes out and motor does not rotate.
A-1) Check correct wiring.

Q-2) Speed of motor is not constant and unstable.
A-2) Check setting of number of motor poles in correct setting in TACHO MODE.

Q-3) Display panel is out and even though RUN/STOP LED is in green color motor does not rotate.
A-3) Check if it is overloaded. Reduce load or increase capacity of motor.

Q-4) The speed of motor is not adjustable
A-4) If rotation speed setting is not possible in turn mode then check if T.G is disconnected.
In this case error message 2(Err.2) may be mostly displayed.
* After disconnect of motor connector, test conductivity of T.G1, 2 blue-blue wire at rear
part of controller.

Q-5) Even though it generates voltage*of T.G, speed of motor is not adjustable.
(If voltage of T.G is not generated, then it is fault in controller.)
* Measure the voltage between T.G 1, 2 blue wire-blue wire at the rear part of controller
in the condition of seperation of motor connector.
A-5) Rotor is rotating without loaded. Check motor.

Q-6) Motor is abnormally heated during its rotation.
A-6) It is normal heat generated due to internal loss of motor therefore some heat shall be considered as normal. However if it is highly heated during operation then its life may be decreased therefore surface temperature of motor is recommended to maintain at below 90℃.

* Note: If motor has T.P(Thermally protector) in it motor circuit is automatically opened if it is abnormally heated. (It is indicated in the motor name plate)

※ Please contact your dealer or our 2nd factory for Product inquiries and A/S request

Leader of Geared Motors.
GGM CO.,LTD.
http://www.ggm.co.kr

Head Office / 1st Factory
327-3 Songnae-dong, Sosa-gu,
Bucheon-si, Gyeonggi-do, Korea
TEL : +82-32-664-7790
FAX : +82-32-611-7791

2nd Factory
272-11 Dodang-dong, Wonmi-gu,
Bucheon-si, Gyeonggi-do, Korea
TEL : +82-32-684-7791
FAX : +82-32-683-5059