GGM

www.ggm.co.kr

Manual

GPA SERIES
SPEED CONTROL UNIT

■ Main Office/1sr Factory : 327-3 Sonne-Dong, Sosa-Gu, Buchun-City, Kyonggi-Do, Korea
Teephone I:+82-32-664-7790 Fax:+82-32-611-7791
■ 2nd Factory : 272-11 Dodang-Dong, Wonmi-Gi, Buchun-City, Kyonggi-Do, Korea
Tel:(032)684-7791 Fax:(032)683-5059

GGM

GGM Co., Ltd.

Thank you for purchasing the GGM product.
Before use this product, read well manual certainly and understand all about knowledge, safety information and cautions of product, and use right way. After read, please be sure to keep fixed place to refer anytime.

1. Confirmation at product arrival

- Confirm whether product is same with order.
- If another product is installed, there is danger of injury or fire hazard.
- Products are protected in Shock Protection of paper packaging, and contains the following items are present.

Please confirm whether there are all of the things correctly as followings;

1) CONTROLLER ---------- 1 unit
2) SOCKET (8PIN) ----------1 unit
3) Manual(this booklet) ----------1 copy

2. Specifications and Dimensions

* 1. Application MOTOR is SPEED CONTROL MOTOR (SP TYPE) and SPEED CONTROL & BRAKE MOTOR (D TYPE).
* 2. ELECTRICAL BRAKE does not have preservation power.
* 3. In case of need SLOW RUN, SLOW STOP functions, please buy our products of 'GSA' SERIES CONTROLLER.

Model / Characteristics	GPA-U	GPA-J	GPA-C	GPA-L
Rated voltage and Power Frequency	single phase AC110V 60Hz AC115V 60Hz	single phase AC100V 50/60Hz	single phase AC220V 50/60Hz AC230V 50/60Hz AC240V 50Hz	single phase AC200V 50/60Hz
Operating Voltage Range	±10%(Rated Voltage Contrast)			
Application MOTOR output *1	INDUCTION : 6~180W REVERSIBLE : 6~ 90W SPEED & BRAKE : 6~180W			
Speed control range	60Hz : 90~1700 rpm 50Hz : 90~1400 rpm			
Speed regulation	5%(Standard value)			
Speed setter	Built-in (can be installed outside regular setter: special order)			
Braking *2	Electric motor brake for a period of time Braking through Current			
Electrical BRAKE time	0.5 seconds Standard values			
SLOW RUN *3 SLOW STOP	No function			
Ambient temperature	-10℃ ~ 40℃			
Storage temperature	-20℃ ~ 60℃			

3. Product outside view and Main Body wiring diagram

■ Main Body

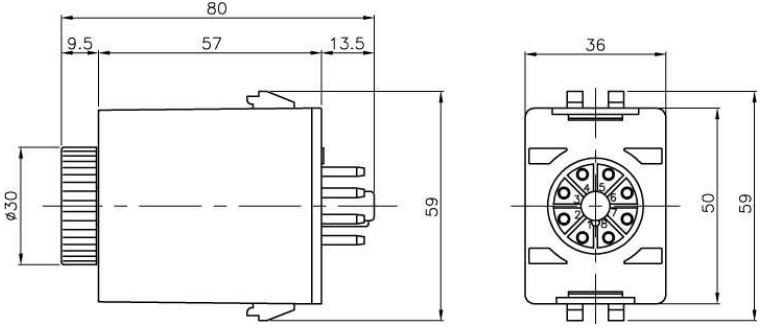

■ SOCKET

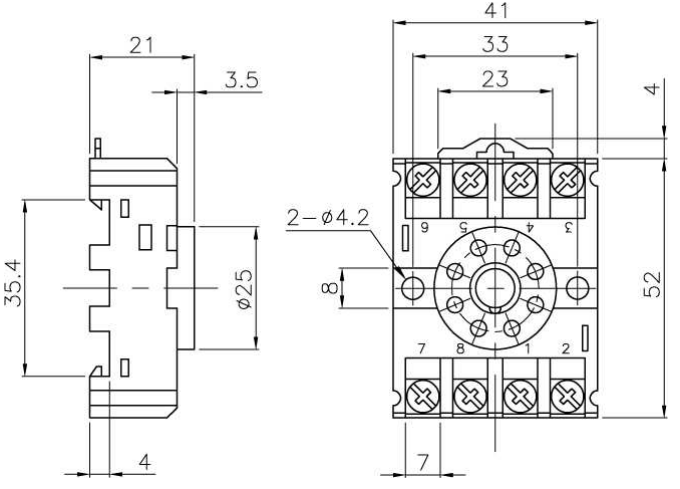

■ Main Body Wiring Diagram

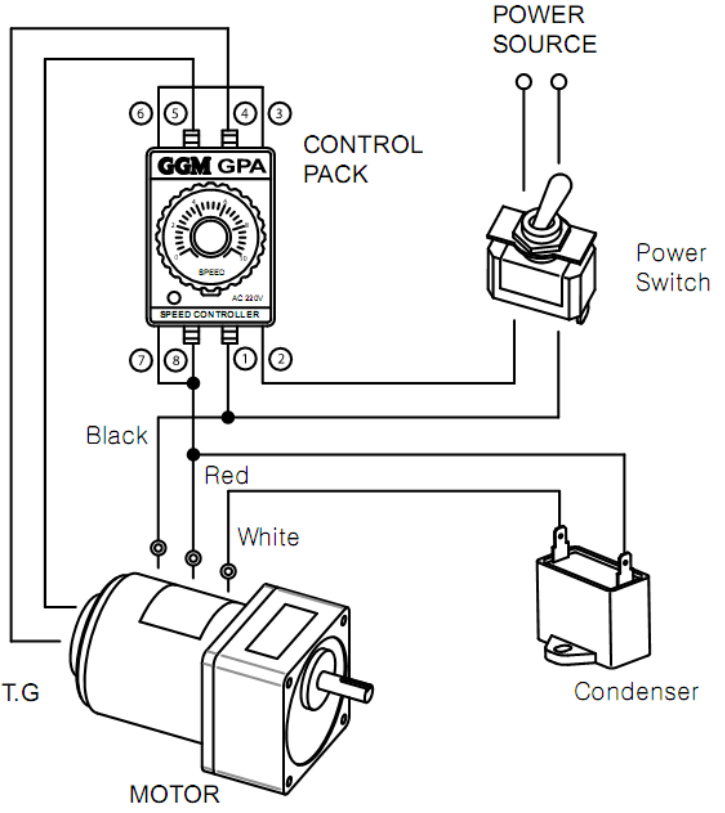

1. Rotational speed of the motor can be changed by speed setter of main body top side
2. In case of wire of Speed signal generator (TG) is long (1m or more), connect to number ④,⑤ terminals using TWIST SHIELD WIRE consisted with 2 lines.(Please do not make ground

for SHIELD)

3. The thick solid line shows the power circuit. Use electric wire about 0.75㎟.

4. Application MOTOR

REVERSIBLE, SPEED CONTROL & BRAKE MOTOR	AC110V 60Hz	AC220V 50/60Hz	AC230V 50/60Hz	AC240V 50Hz
K6R□6N□-SP, D	GPA-U	GPA-C	GPA-C	GPA-C
K7R□15N□-SP, D				
K8R□25N□-SP, D				
K9R□40N□-SP, D				
K9R□60F□-SP, D				
K9R□90F□-SP, D				
K9R□120F□-D				
K9R□180F□-D				

INDUCTION	AC110V 60Hz	AC220V 50/60Hz	AC230V 50/60Hz	AC240V 50Hz
K6I□6N□-SP	GPA-U	GPA-C	GPA-C	GPA-C
K7I□15N□-SP				
K8I□25N□-SP				
K9I□40N□-SP				
K9I□60F□-SP				
K9I□90F□-SP				
K9I□120F□-SP				
K9I□180F□-SP				

1. □ marks SHAFT TYPE and voltage specification.
2. -SP is SPEED CONTROL MOTOR PLUG-IN TYPE and
   -D is SPEED CONTROL & BRAKE MOTOR.

5. Precautions

■ Caution for installation

1. Use in the places where ambient temperature range is -10℃~+50℃, and humidity is under 85%.

2. Aavoid such places where reaches direct sunlight, where there is moisture and oi, and should be installed COVER if install in such places.

3.Should avoid where, the places of heavy vibration, much dust, occurring flammable GAS, corrosive GAS

■ Caution for wiring

1. Connect using the SOCKET but do not solder directly to PIN of main body.

2. In case of elect SOCKET, please confirm clearly terminal number.

3. When insert CONTROL PACK in to SOCKET groove, please insert after turn off power and confirm PIN number.

4.Install MOTOR and CONTROL PACK as near as possible and please wire in shortest

distance.

5. Large output such as MOTOR, solenoids, high-frequency power, electric welding may cause malfunction of CONTROL PACK. Please wire separating with CABLEs of main circuit of above devices by usong power of separate circuit.

■ Caution for operation

1. Use MOTOR surface temperatures in actual load conditions less than 90 ℃.
2. Please turn OFF power when suspend long period.
3. Do not run on AC power.start atstart, stop of MOTOR.
   There is worry to be damaged in product by SURGE voltage occurred from SWITCH.

6. Basic Electrical Wiring

6-1 Unidirectional operation + change of speed

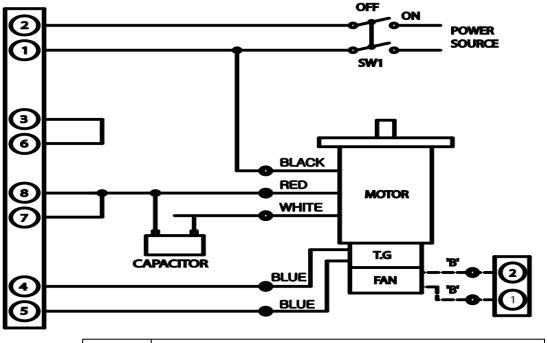

SW1	AC125V or over AC250V 5A

■ Operation for example

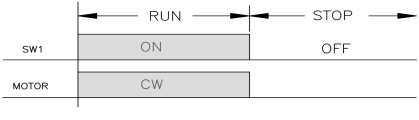

■ Caution

1. In the case of above connection, direction of MOTOR rotation is clockwise (CW) seeing from axis. In case of do at counter-clockwise (CCW), change each other red color and white of MOTOR and connect .
2.When wiring more than 60W MOTOR, please connect FAN MOTOR outgoing line (Yellow line) to ②,①. ('B')

6-2. Unidirectional Operation + change of speed + braking

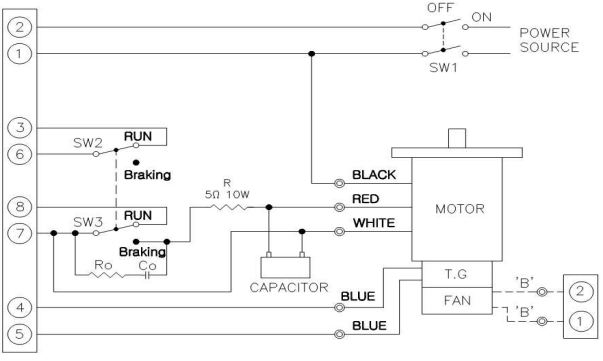

SW1, SW3	AC125V or over AC250V 5A
SW2	DC20V 10mA
Ro, Co	R0=10~200Ω (over 1/4W) C0=0.1~0.33㎌ (200 or 400WVAC)
R	over 4.7Ω~6.8Ω 10W

■ Operation for example

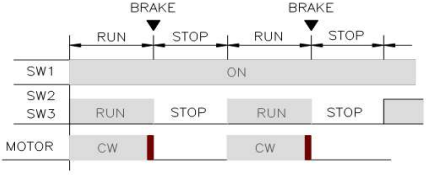

■ Caution

1. Rotational direction of MOTOR is clockwise (CW) seeing from axis. In case of do at counter-clockwise (CCW), change each other red color and white of MOTOR and connect
2. When make SW3 by stop while operation, braking (Electric brake) acts about 0.5 seconds and stops rapidly. (There is no preservation power.)
3. When wiring more than 60W MOTOR, please connect FAN MOTOR outgoing line (Yellow line) to ②,①. ('B')

6-3. Variable speed reversing + change of speed

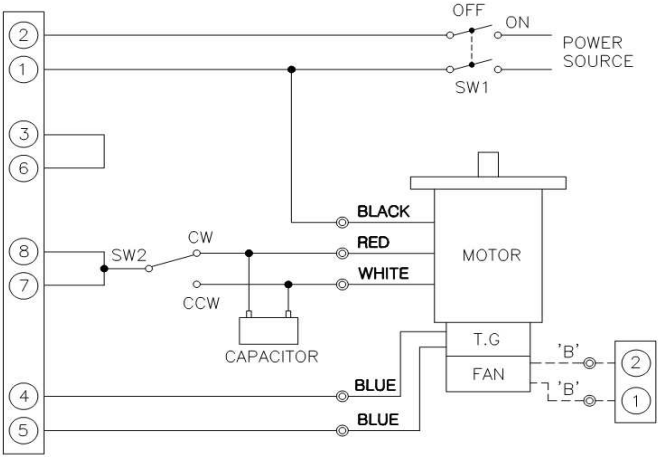

SW1, SW2	AC125V or over AC250V 5A

■ Operation for example

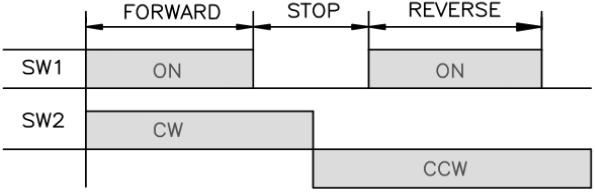

■ Caution

1.INDUCTION MOTOR sets rest period and please change SW2 after stopping the rotation. (Counterclockwise rotation should be run after stopping.)

2. REVERSIBLE MOTOR does not need rest period. It is ni problem even if operate SW2 in ON state lof SW1.

3. When wiring more than 60W MOTOR, please connect FAN MOTOR outgoing line (Yellow line) to ②,①. ('B')

6-4. Unidirectional Operation + change of speed + braking

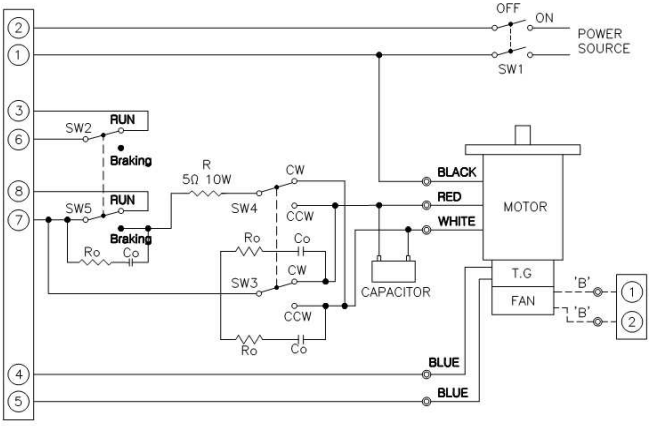

SW1, SW3, SW4, SW5	AC125V or over AC250V 5A
SW2	DC20V 10mA
Ro, Co	Ro=10~200Ω (over 1/4W) Co=0.1~0.33㎌ (200 or 400WVAC)
R	over 4.7Ω~6.8Ω 10W

■ Operation for example

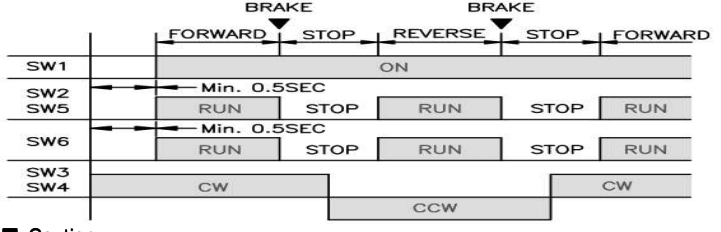

■ Caution

1. If make SW5 to stop from operation, braking (Electric brake) acts about 0.5 seconds and stops rapidly.
2. This time, do not operate SW3, SW4 about 0.5 seconds.
3. Please do SW3, SW4 switching faster than switching SW5 from stop to operation.

7. Application electricity wiring Ω

7-1.Using external speed setter

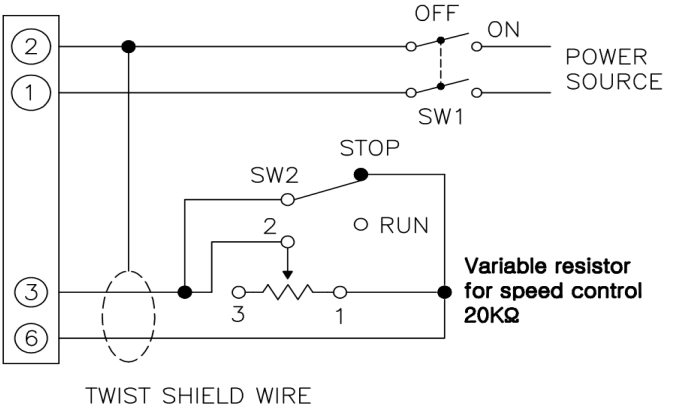

* Do not use VR 3-terminal .
  VR: external speed setter (attribute value 20KΩ 1/4W B)

■ Caution

1. Please set scale of the rate setter of main body by lowest (0).
2. please wire as short as possible. There may be malfunction. If malfunctioning, please use the TWIST SHIELD WIRE.

Please connect SHIELD of TWIST SHIELD WIRE to #2 terminal.
(Reduction from external noise)

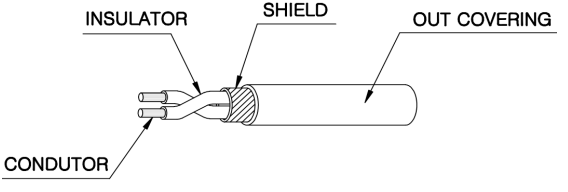

TWIST SHIELD WIRE

7-2. How to make fast starting time

when approved the starting signal in power SWITCH SW1, if MOTOR starts late, operate Run/Stop inSW2 using external speed setter VR.

Example 1) If braking does not work

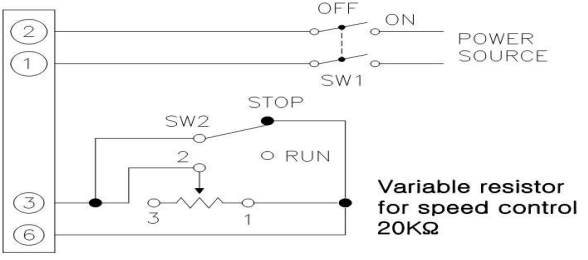

SW2	DC 20V 10mA

* Do not use VR 3-terminal .

VR: external speed setter (attribute value 20KΩ 1/4W B)

■ Operation for example

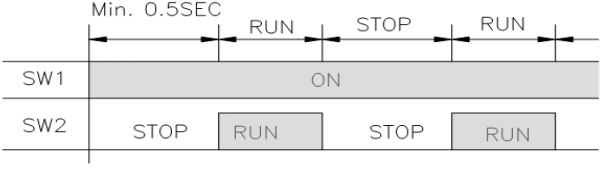

■ Caution

1. Make input time of power SWITCH SW1 faster over 0.5 seconds than startup time signals of SW2.
2. Set scale of the speed setter unit by lowest (0) and adjust speed at external speed setter VR.
3. In case of Run/Stop, operate SW2 in state of ON of SW1. MOTOR can be controlled even by weak signal.
4. Please make SW1 by OFF in case of stop for a long time.

7-3. How to make fast starting time

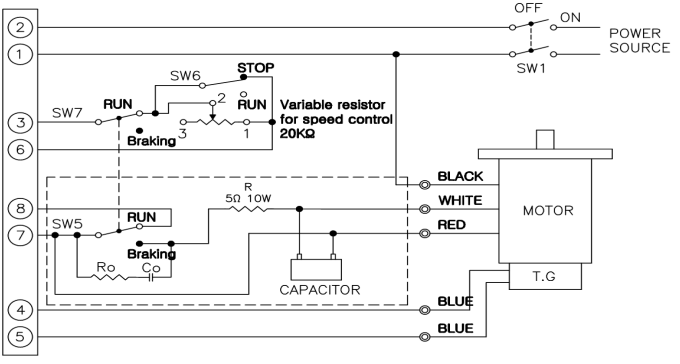

Example 2) when make braking

SW1, SW5	AC125V or over AC250V 5A
SW6, SW7	DC20V 10mA
R0, C0	R0=10~200Ω (over 1/4W) C0=0.1~0.33㎌ (200 or 400WVAC)
R	over 4.7Ω~6.8Ω 10W

■ Operation for example

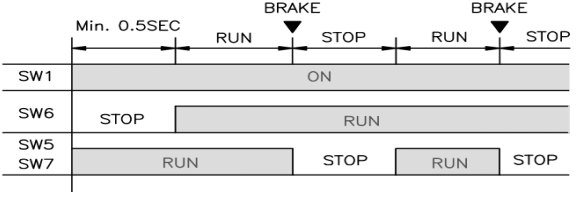

■ Caution

1. Electricity wiring above is 「one-way operation + change of speed + braking」.
2. Operate power SWITCH SW1 faster than SW6 more than about 0.5 seconds
3. Set scale of the speed setter unit by lowest (0) and adjust speed at external speed setter VR.
4. Please make SW1 by OFF in case of stop for a long time.

8. Electron BRAKE attachment MOTOR wiring

8-1. Occasion that use jointly electric BRAKE of CONTROLLER

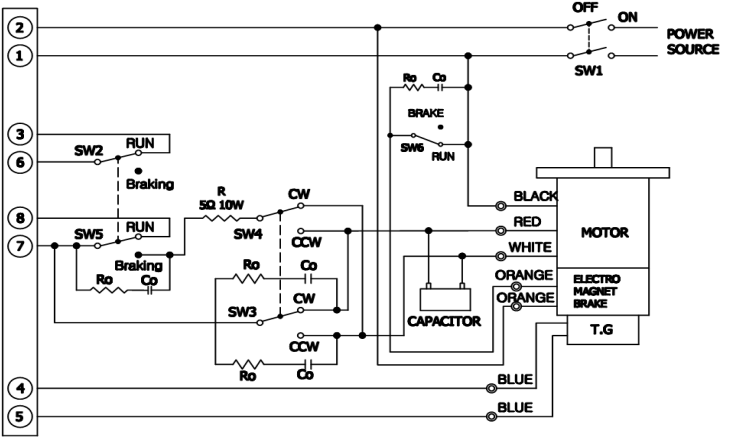

SW1, SW3, SW4, SW5, SW6	AC125V or over AC250V 5A
SW2	DC20V 10mA
R0, C0	R0=10~200Ω (over 1/4W) C0=0.1~0.33㎌ (200 or 400WVAC)
R	over 4.7Ω~6.8 10W

■ Operation for example

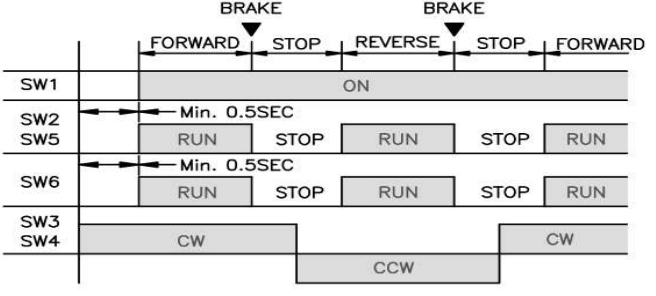

■ Caution

1. MOTOR stops rapidly by action of electric BRAKE (Brake) when make braking while operation.
2. Please operate SW3, SW4 after MOTOR stops.
3. Please replace SW3, SW4 faster than replacement from stop to operation of SW2, SW5, SW6.
4. Make power SWITCH SW1 approving time about 0.5 seconds faster than operating starting signal due to SW2, SW5, SW6.
5. In case of Operating/Braking, please operate at SW2, SW5, SW6 in state of ON of SW1.

8-2. Occasion thatdo not use jointly electricity BRAKE of CONTROLLER.

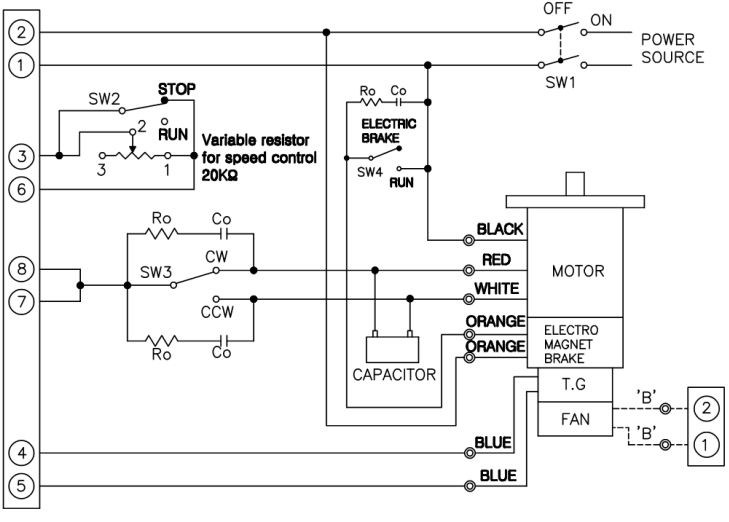

SW1, SW3, SW4	AC125V or over AC250V 5A
SW2	DC20V 10mA
R0, C0	R0=10~200Ω (1/4W) C0=0.1~0.33㎌ (200 or 400WVAC)

■ Operation for example

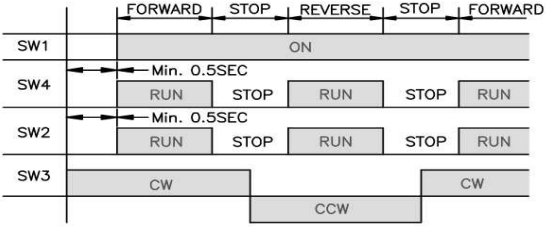

■ Caution

1. Please change SW3 after stop rotation.
2. Make power SWITCH SW1 approving time about 0.5 seconds faster than operating starting signal due to SW2, SW4.
3. In case of Run/Stop, operate at SW2, SW4 in state of ON of SW1. MOTOR can be controlled even by weak signal.
4. Set scale of the speed setter unit by lowest (0) and adjust speed at external speed setter VR.
5. Please make SW1 by OFF in case of stop for a long time.

9. Failure causes and countermeasures

Anomalies	Check parts	Checklist	Breakdown determination portion	Countermeasures
Occasion that MOTOR does not rotate	wiring	Whether was wrong wiring	Check wiring	Modify the wiring
	Terminal Number ①, ⑦	Check for change of speed setting voltage	In case voltage does not change, SPEED CONTROLLER badness	
			In case of voltage changing from 0V up to Power voltage	
			1) MOTOR badness	
			2) overload	Lighten the load.
			3) CONDENSER badness	
Occasion that MOTOR rotates but speed change does not work	wiring	Whether was wrong wiring	Check wiring	Modify the wiring
	Speed generator terminal ④,⑤	Is voltage generated about AC20V at about 1700rpm, about AC18V at about 1400rpm?	In case do not generate speed generator badness In case generate SPEED CONTROLLER badness	

※ Please contact your dealer or our 2nd factory for Product inquiries and A/S request

Leader of Geared Motors.
GGM CO.,LTD.
http://www.ggm.co.kr

Head Office / 1st Factory
327-3 Songnae-dong, Sosa-gu,
Bucheon-si, Gyeonggi-do, Korea
TEL : +82-32-664-7790
FAX : +82-32-611-7791

2nd Factory
272-11 Dodang-dong, Wonmi-gu,
Bucheon-si, Gyeonggi-do, Korea
TEL : +82-32-684-7791
FAX : +82-32-683-5059